GF系列/SERIES

外部尺寸/Overall dimension

GF200

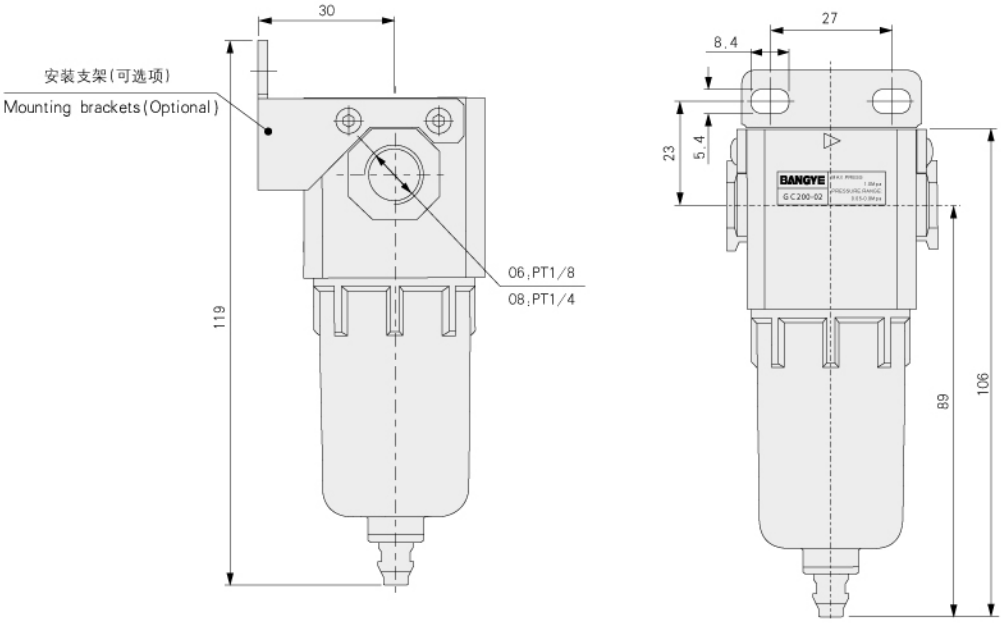

GF300 GF400

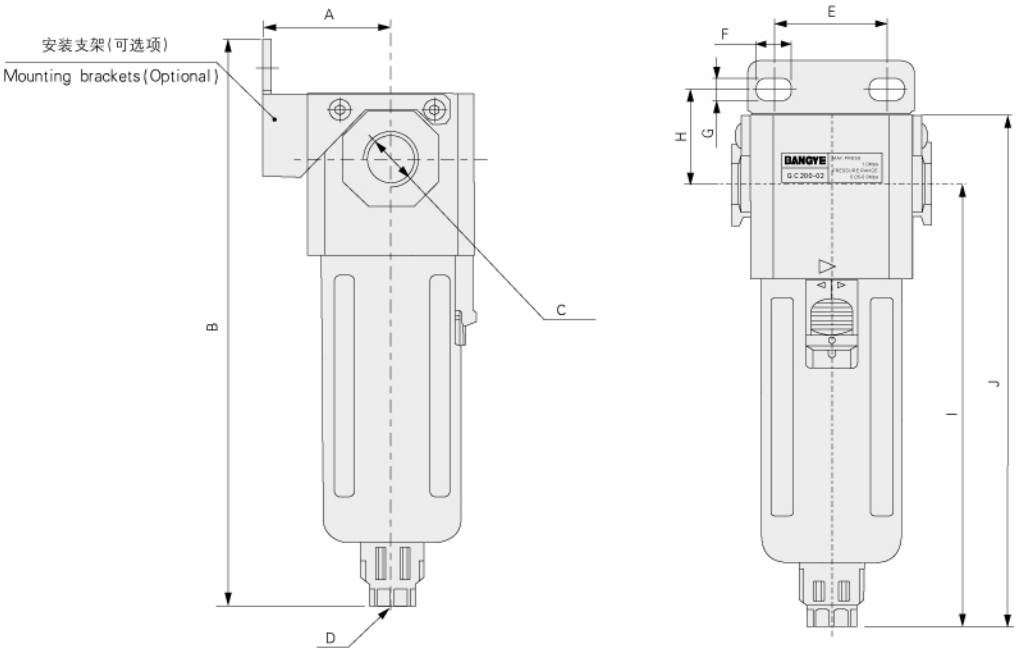

型号/符号(Model/Code)	A	B	C	D	E	F	G	H	I	J
GF 300-08	41	182	PT1/4	G1/8	40	8	6.5	27	143	164
GF 300-10	41	182	PT3/8	G1/8	40	8	6.5	27	143	164
GF 300-15	41	182	PT1/2	G1/8	40	8	6.5	27	143	164
GF 400-10	50	208	PT3/8	G1/4	55	11	8.5	33.5	166.5	191.5
GF 400-15	50	208	PT1/2	G1/4	55	11	8.5	33.5	166.5	191.5